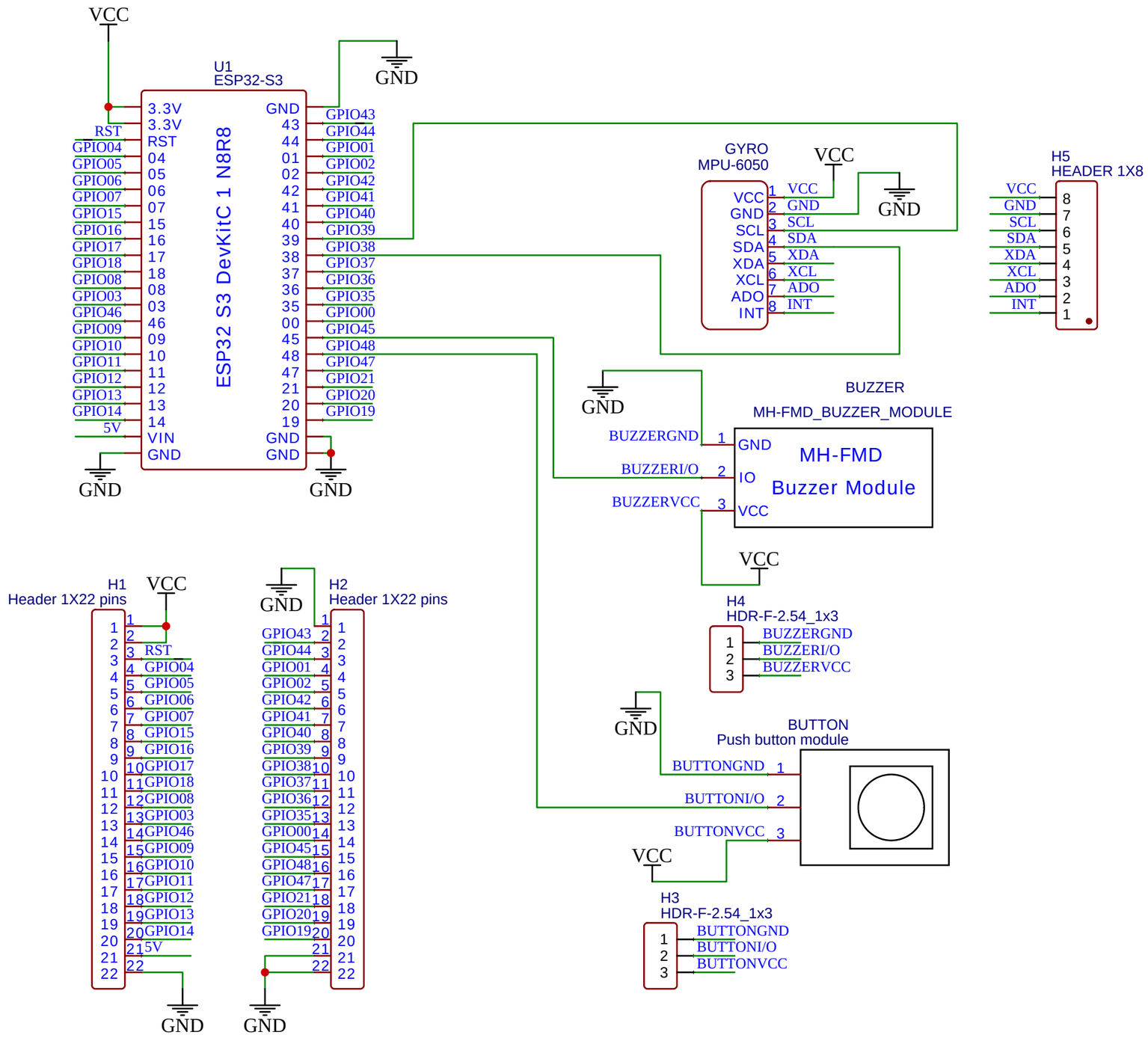


| | |
|---|---|
| TITLE: BOARD 1 PATIENT | REV: 1.0 |
| EasyEDA Company: | Sheet: 1/1 |
| Date: 2026-03-12 Drawn By: Axis32 GROUP | |